UltimateAir
Energy Efficient Ventilation

Model **ER80M** Manual & Installation Guide
Variable Flow ~20 -100 CFM

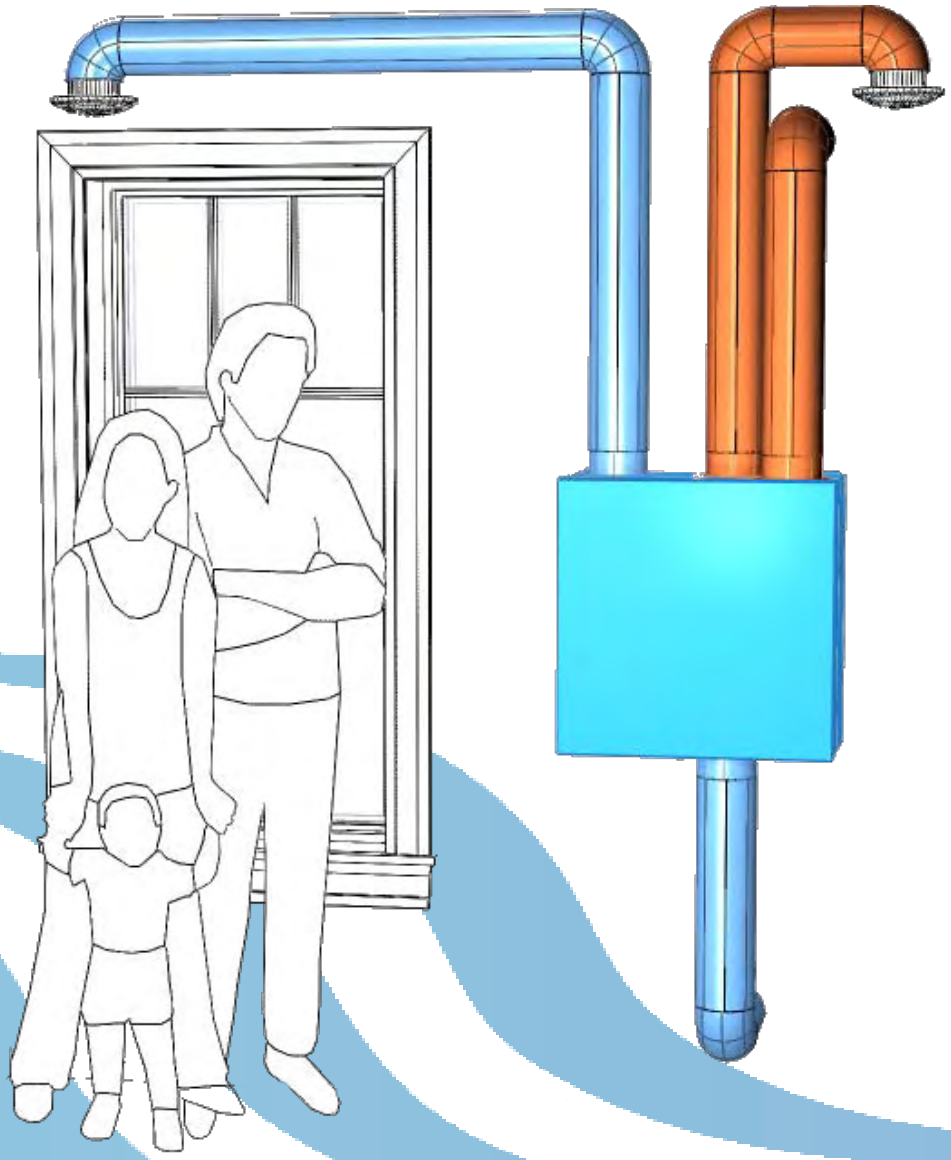

UltimateAir
RecoupAerator

800.535.3448 **www.UltimateAir.com** **info@ultimateair.com**

Introduction

Thank you for your purchase of one of the most advanced air filtration and energy recovery ventilation systems available. The RecoupAerator is designed to bring fresh filtered air indoors while simultaneously exhausting stale air.

The RecoupAerator ER80M is a whole house Energy Recovery Ventilator (ERV), meaning temperature and a portion of the moisture from the stale, outgoing air is transferred to the incoming Fresh Air. No matter what the season, your home will comfortable with healthy clean air.

In addition to having an energy transfer rating of up to 99%, the RecoupAerator moderates and stabilizes indoor humidity throughout the entire year, most noticeably during the extremes of winter and summer.

- Variable blower speed with Quiet operation
- Automatic frost prevention down to 10° F
- No Condensation drain necessary
- 3 EC motors with Permanently lubricated Ball Bearings
- 99%+ heat recovery efficiency
- 95% filtration at 1.8 microns (MERV 12)
- Up to 75% moisture transfer capability (depending on season)
- Low/easy maintenance
- Exceeds ASHRAE 62.2 ventilation recommendations
- Filter service indicator on control dial
- Fully insulated
- 2-year Warranty with Extended Available

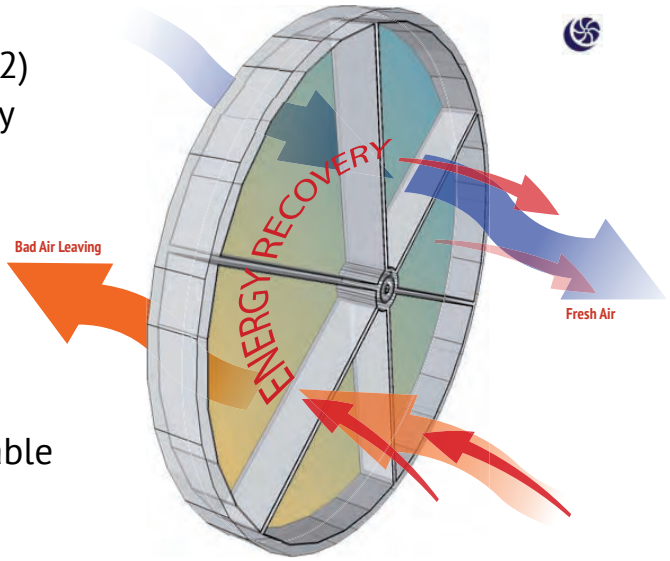

Specifications

Model	UltimateAir RecoupAerator ER80M Energy Recovery Ventilator (ERV). Includes pre-filters, patented energy transfer/filtration material, fans, control, and motors
Airflow Capacity	~20–100 CFM
Apparent Sensible Effectiveness	99% (ASE)... Testing In Accordance with CAN/CSA-C439 Please see third-party testing data included in this manual
Heat Exchange Type	Patented rotary random matrix polymer
Filtration	Filtration material 95% effective at 1.8 microns (MERV 12), Washable, Replaceable, with additional Washable aluminum pre-filter
Electrical Requirement	120 VAC, single phase, 2.3 AMP max no preheat 5AMP max with preheat
Fuse (low voltage)	¼ Amp, 250V 3AG slow blow fuse
Dimensions	23¼ in. H x 23 ½ in. W x 12 ½ in. D (59.1 cm H x 59.7 cm W x 31.8 cm D)
Unit Weight	55lb (25kg)
Shipping Weight	60lb (27.2kg)
Mounting	May be mounted by vertically or horizontally suspending from ceiling joists, or on a shelf in conditioned mechanical spaces such as attics, basements, and utility rooms. Four duct collars included are 5” in diameter.
Maintenance	Check Pre-filters and Wheel filter material every 6 mo.

Application

The ER80M is an Energy Recovery Ventilator (ERV), meaning that the RecoupAerator captures temperature and moisture from the stale, outgoing air and transfers it to the incoming air stream.

Controls

The RecoupAerator is equipped with a variable blower speed control, “check filter” indicator light, auxiliary IAQ control inputs.

These controls allow you to adjust the airflow as needed to maintain a comfortable level of fresh air. The “check filter” indicator light is designed to let you know when to check and/or clean/replace the energy transfer/filtration material.

Frost Control

Programmed to regulate heat exchange automatically to prevent frost build-up down to approximately 10˚ F. During this mode, the Wall Dials green light will be flashing.

Electric or Geo-thermal Preheating is Available as a frost control option.

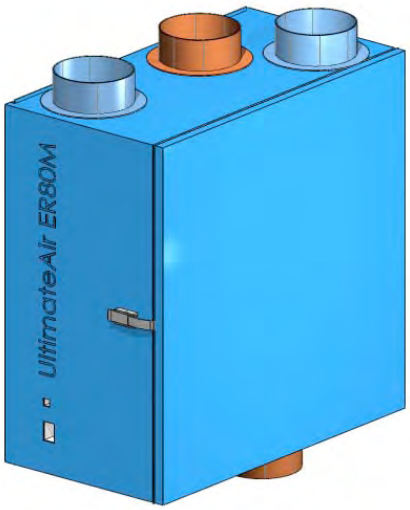

Performance Data

UltimateAir ER80M			Tested CAN/CSA-C439-09	
	Supply Temperature °F	Net Airflow CFM	Sensible Recovery Efficiency	Apparent Sensible Effectiveness
HEATING	32	89	84	99
	39.2	89	82	99
	17.6	89	88	99
	5	89	81	97
COOLING	95	89	45 TRE	79

Fan

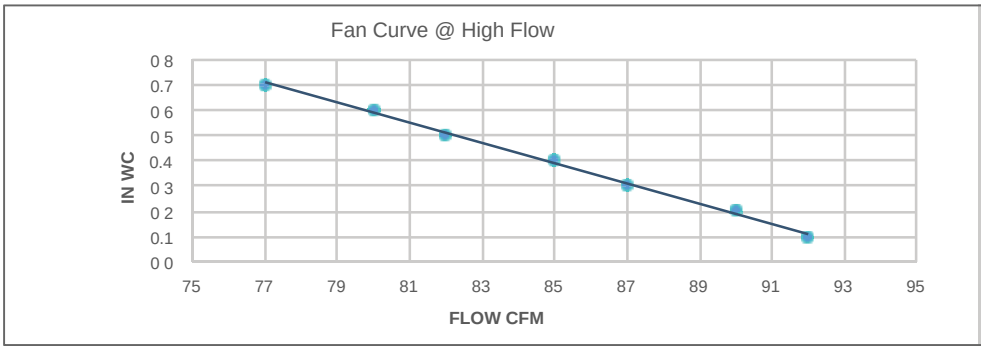

IN WC	CFM	WATT
0.1	92	156
0.2	90	154
0.3	87	152
0.4	85	152
0.5	82	149
0.6	80	147
0.7	77	144

Power *The power curve was generated using the average airflow rate over all four ducts.*

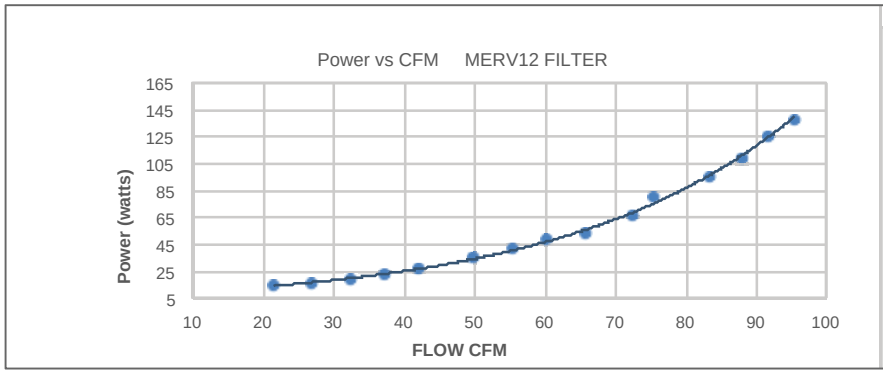

CFM	POWER	Watt/CFM	Range
21	15	0.70	LOW
27	16	0.60	
32	19	0.59	
37	23	0.62	
42	28	0.66	
50	35	0.70	
55	43	0.77	
60	50	0.83	MED
66	54	0.82	
72	67	0.93	
75	80	1.06	
83	95	1.14	
88	109	1.24	
91	125	1.37	
95	137	1.44	HIGH

Note: Curves are generated from actual test data and should only be used as general guidelines. Actual results may vary.

Installation & Ducting

We recommend a licensed HVAC technician install this product, because of complex considerations such as airflow dynamics and condensation issues. Please read these instructions carefully before beginning any installation procedure. Failure to follow them closely may reduce ventilation effectiveness, cause a hazardous condition, and/or invalidate your warranty. Installation by non-licensed HVAC personnel may void the warranty.

Unpack your RecoupAerator and check to be sure the following items are included and undamaged:

- UltimateAir RecoupAerator ER80M Energy Recovery Ventilator with four (4) 5” diameter starter collars.
- Wall mount control dial pre-wired for test run.
- Literature package with this manual, & warranty registration.

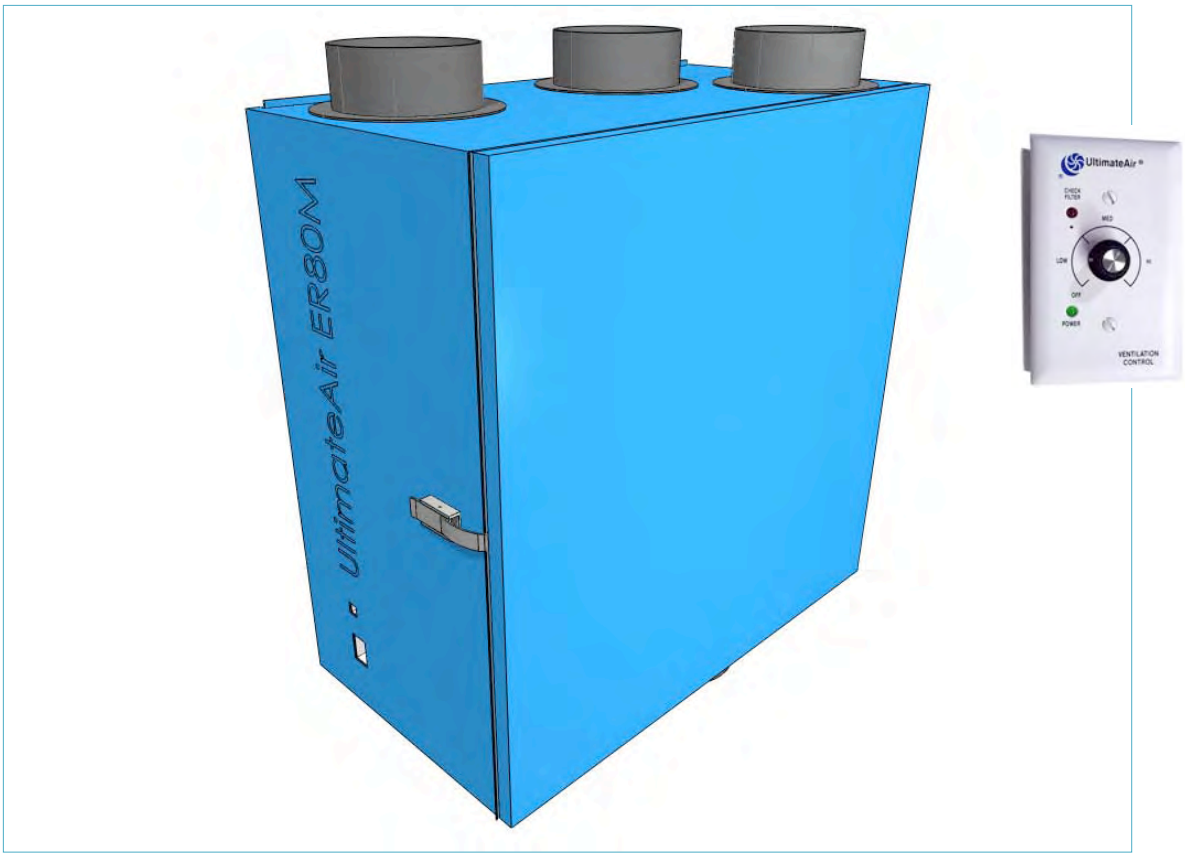

When installing:

1. **Test Run** the RecoupAerator by plugging into a power outlet, and adjust the blower speed with the included Wall Dial. Familiarize yourself with the intake and outlet duct configuration and installation dimensions. Decide how you will mount the unit. We recommend ACCA's manuals D & J for proper load calculations and duct sizing.
2. After installation is complete, fill in contractor's name and phone number on the last page of this manual, and please **complete the Warranty Registration** to validate the installation.

CAUTION

Always disconnect the power source before wiring to prevent electrical shock and/or equipment damage.

Electrical requirement: 120 VAC, single phase, 2.3 AMP max no preheat or 5AMP max with preheat

The RecoupAerator is equipped with a three-pronged grounding plug for your protection against shock hazards and should be plugged directly into a properly grounded, 120V, three-pronged wall receptacle. If only a two-pronged outlet is available, it must be replaced with a properly grounded three-pronged receptacle in accordance with the National Electrical Code and local codes and ordinances. A qualified electrician should do this work. Use proper circuit protection. If you have any doubts about the grounding in your house, contact a qualified electrician.

Positioning the RecoupAerator

We recommend the RecoupAerator be mounted in a conditioned space, as this will affect the performance and longevity of the unit. If the RecoupAerator is installed in an unconditioned space, the section(s) of inside ducts, and possibly the unit itself must be insulated from the unconditioned environment.

Position the RecoupAerator in a location convenient to existing ducting. If possible, locate equipment away from the quiet rooms (e.g., bedrooms). Avoid directly suspending the RecoupAerator from the mid-span area of joists. This can result in structural vibration. Allow adequate space for maintenance and service of the RecoupAerator.

Vertical/Wall

Top and Bottom Exhaust shown

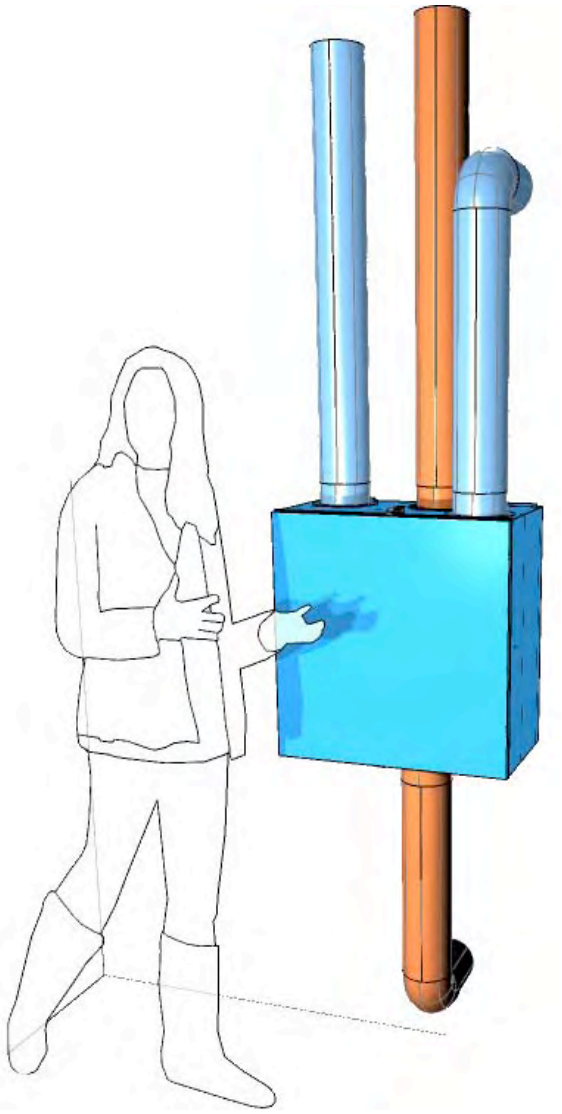

Horizontal Ceiling

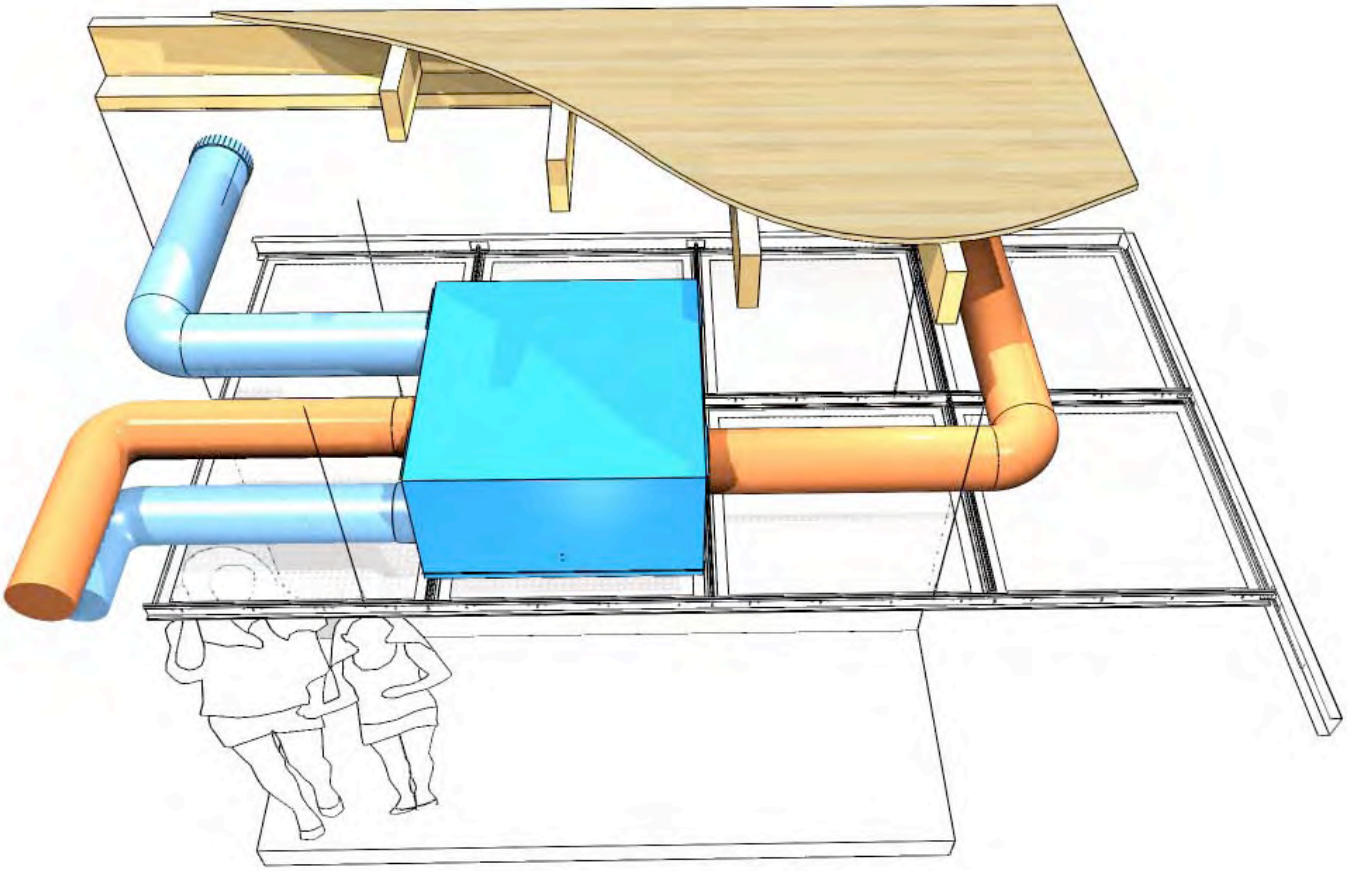

Ducting to Outside

Note: The ducts to the outside must be insulated. The collars labeled "*to Outside*" must be ducted through the exterior of the building, and the following precautions should be taken.

1. The ends of the two ducts should be as far apart as practical (at least six feet, either horizontally or vertically) to minimize re-circulation of the exhaust air.
2. Terminate the ducts using exterior weather hoods. Ensure that the exterior weather caps have wire mesh to keep out birds and debris. Angle the weather caps down and away from each other and place them away from exhaust vents for other appliances such as dryers or hot water heaters. Avoid placing air intake vents near exhaust vents from adjacent buildings or sources of automobile exhaust. Never place an air intake in a garage, for instance.
3. Make sure that the joints between the termination vents and the walls are weather sealed.

Connecting Duct Work

Ducting between the RecoupAerator and the outdoors must be insulated and sealed with a vapor barrier to prevent 'sweating'.

Duct Collars are packaged inside the machine.
(5" diameter)

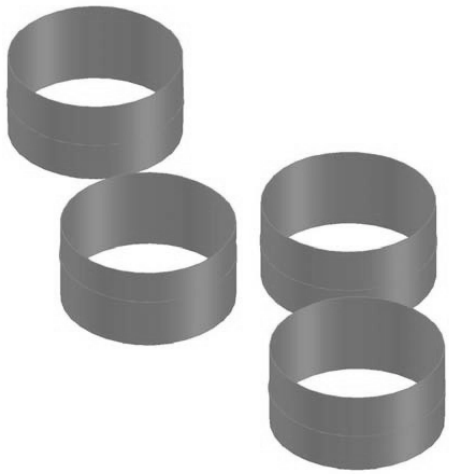

Unpack collars (4) from inside of unit by opening the two latches.
Remove the door and interior foam panel to access the collars.

Bend tabs up (x12) as shown below using flat nosed pliers.

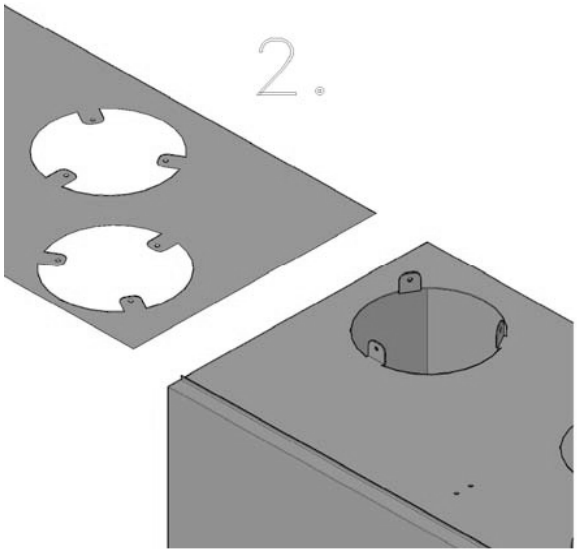

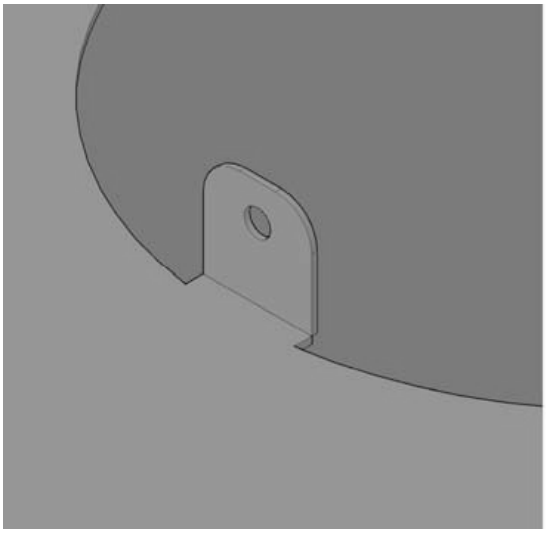

Continued next page...

Center Collar inside bent up tabs and fasten using supplied tek screws.

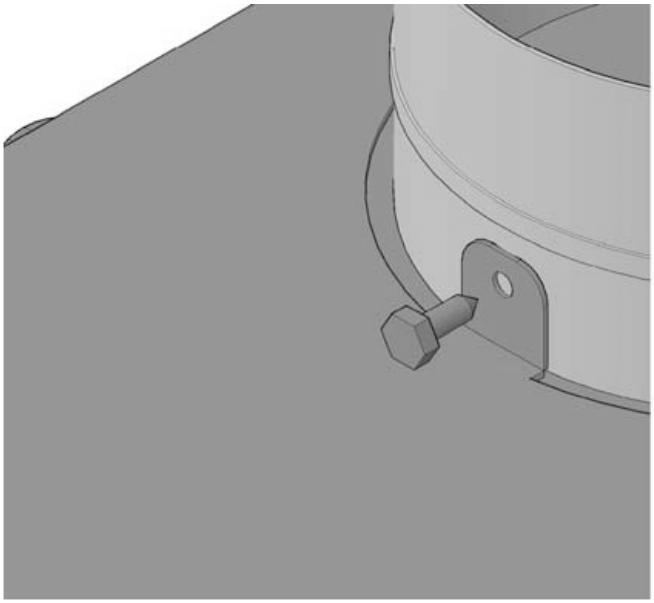

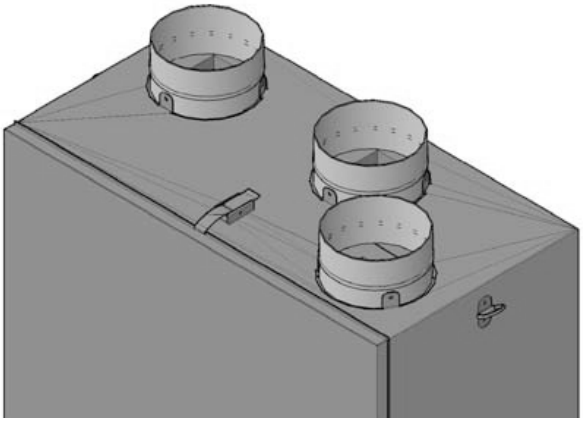

Apply Mastic tape/putty/paint so it spans & seals the collar to the white foam AND blue steel case.

General Ducting Guidelines

To ensure maximum airflow, use the largest practical duct for the installation. Design and installation of ductwork must be in accordance with HVAC standards and regulations to allow required quantities of fresh air to circulate through the building. Insulated flex ducts tend to reduce air noise levels but add airflow resistance, and galvanized ducts provide the least resistance to airflow, but may amplify noise. Duct connections inside each building will vary. The outside duct connections are the same for most installations and must be insulated.

The duct installation should follow the following standards:

A. **Mechanical integrity** The system will remain as built for the life of the building, without developing leaks, obstructions, or insulation failures.
B. **Freedom from leaks** All air moved by the air handler will be drawn from and delivered to the intended conditioned spaces.
C. **Proper insulation** Conditioned air should Not exchange heat with Unconditioned spaces.

A licensed HVAC contractor should do the duct design calculations.
To minimize backpressure: Make the intake and exhaust duct runs as short and straight as possible. Use 45-degree elbows instead of 90-degree where practical. Where flex duct is used, make sure that no "crimping" or "collapsing" of the duct occurs. Stretch flex duct evenly to avoid air restriction. Use "Y" connections instead of "T" connections wherever possible. Size ductwork according to recognized industry standards such as Manuals D and J, published by the Air Conditioning Contractors of America (ACCA).

General Ducting Guidelines ...

- Use the minimum length of flexible duct possible
- Minimize any noise transmission through the ducts by using a short run (2-3 ft) of insulated flex duct on duct trunks coming from the unit and going to the inside of the house.
- Position outdoor fresh air intakes away from known sources of pollution. A six-foot separation is the recommended distance between the Fresh air intake and stale air exhaust. Locate Intake and Exhaust 40 inches from the corner of the building, and above the projected snow plane.
- Position inside grill/register vents so that fresh air does not blow directly onto occupants or the thermostat.
- Fasten joints between duct components with screws, sealant, and/or rivets and wrap them with metal foil duct tape to ensure no leaks.

Making a Noisy Duct System Quiet

A. Run at the lowest flow setting necessary for fresh air requirements.

B. When installing the unit, allow for a three-foot section of insulated flexible duct to go from the starting collar on the unit to the rest of the ductwork (on all four collars).

C. Locate the unit farther away from the source of the noise pollution area (if the unit is close to a living room vent where the noise is too loud) This will allow the noise to dissipate in the longer duct length.

Tools to install non-metallic flexible duct:

Knife or Scissors/Wire Cutter: Use knife or scissors to cut duct wall. Use wire cutters to cut the spiral wire helix.

Foil Tape: Use only tapes that have been listed and labeled to Standard UL 181B and labeled “181B-FX”. Use two wraps of 1½” minimum width.

Making a Noisy Duct System Quiet…

Draw Band/Plastic Clamp/Clamp Tool: Use for low-pressure systems up to four-inch wg (diameters of three to 10') and up to two-inch wg (diameters of 12" and over). To achieve proper tensioning of clamp, set clamp to max tension setting.

- Support hardware (e.g., couplings, and fittings) independently of flexible duct using elbows or other devices.
- Repair damaged vapor barrier jacket. If internal core is penetrated, replace or splice flexible duct.
- Install duct fully extended along straightest path possible.
- Flexible duct shall be supported at manufacturer's recommended intervals, but at no greater distance than five feet, and the maximum permissible sag is ½" per foot of spacing between supports.
- In no case will the hanger or saddle material supporting the flexible duct be less than 1½" wide.

Wiring and Controls

CAUTION

Before performing any service to your RecoupAerator, switch off the unit and disconnect power from the unit. You must disconnect power by either unplugging the unit or by switching the applicable breaker in your breaker box to off. Otherwise, the main power to the unit will remain hot and could cause serious bodily harm.

Basic Electrical Wiring

The RecoupAerator Model ER80M is supplied with a wall mountable Flow Dial control which may be mounted near the unit or in a remote location. Follow all applicable electrical codes.

The RecoupAerator can be wired to run in a number of different ways. This section of the manual describes each benefit option and shows the wiring procedure to accomplish them.

Factory Default Settings

Airflow. This unit contains two blower motors, each independently controlling the airflow coming into the building (Blower 1, supply), and leaving the building (Blower 2, exhaust). The unit has the capability of lowering the airflow from the building going to the outside by a selectable set of offset jumpers on the three-motor control board. Factory settings provide for equal airflow, that is, equal airflow both coming into the building and exiting.

Input. The RecoupAerator comes equipped to handle several different types of control input. From the factory, The RecoupAerator is wired with the Flow Dial Control, unless otherwise specified at the time of order.

EconoCool. This unit comes with an economic 'night' flush feature. Please see the 'econocool' section in this manual for further detail.

Wall Dial Flow Control – *Included*

Before relocating the Flow Dial, connect the Dial and the Power Cord then test-run the unit.

The Flow Dial Control may be located in a convenient location by disconnecting the ethernet style cord form the back of the dial, and extending using an appropriate 6-conductor 20/22 gauge wire.

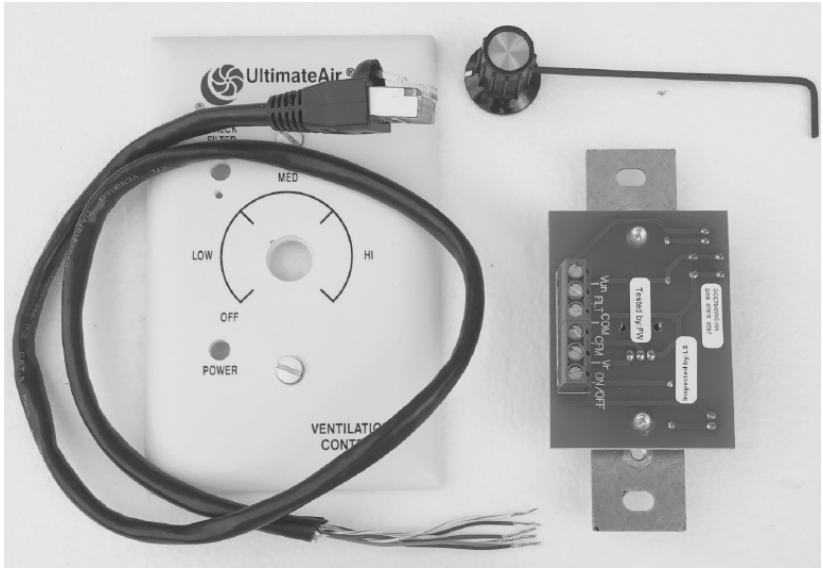

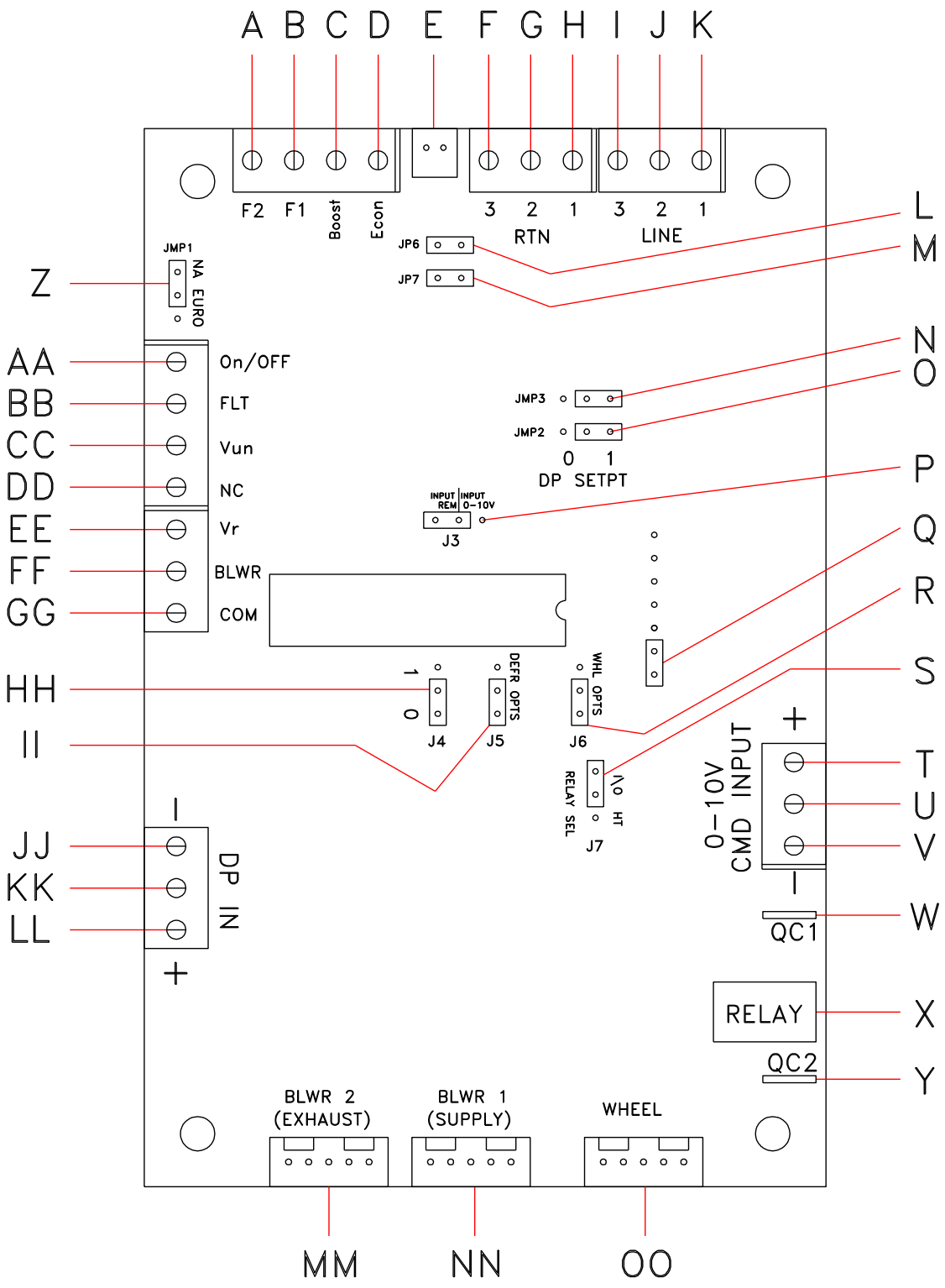

3-Motor Main Control Board

3-Motor Main Control Board Description

A. **F2**: Wiring input from furnace. 24 VAC common. In some cases "C" post from thermostat wiring on the furnace. If wiring to furnace, REMOVE Jumpers at L and M (JP6 & JP7).

B. **F1**: Wiring input from furnace. 24 VAC line. In some cases "G" post from thermostat wiring on the furnace. If wiring to furnace, REMOVE jumpers at L and M.

C. **Boost input**: When this post receives a 24 VAC from I, J, or K, the unit will be turned on to high speed (max air flow).

D. **EconoCool input**: When this post receives a 24 VAC signal from I, J, or K, the EconoCool function will be enabled.

E. **Temperature input**: Temperature thermistor located at the incoming air stream (duct 1) connects through this input.

F. RET 3: 24 VAC return post. Common from the internal transformer.

G. RET 2: 24 VAC return post. Common from the internal transformer.

H. RET 1: 24 VAC return post. Common from the internal transformer.

I. LINE 3: 24 VAC line post. Line voltage from the internal transformer.

J. LINE 2: 24 VAC line post. Line voltage from the internal transformer.

K. LINE 1: 24 VAC line post. Line voltage from the internal transformer.

L. **JP6**: Jumper connects 24 VAC Line from internal transformer to F1.

M. **JP7**: Jumper connects24 VAC return from internal transformer to F2.

N. **JMP3**: Offset / DP Set point jumper. See Air Flow Offsets

O. **JMP2**: Offset / DP Set point jumper. See Air Flow Offsets

P. J3: When J3 is in the 0-10V position, JMP1 MUST be in the EU position. J3 Selects control input from either the Wall Dial Control, or a 0-10V DC input voltage (at T and V).

Q. **Programming jumper**. Must be in place for to run RecoupAerator.

R. **J6**: w/ furnace tie to set minimum airflow to 70CFM in 1posistion

S. **J7**: Relay selection. Jumper selects whether the normally open relay (X) closes when the unit turns on (position I/O), or when the temperature thermistor reads below 10ºF (position HT). Default is position I/O.

T. **0-10V DC input**: When J3(P) is in the 0-10V position, a positive line voltage 0-10V DC may be used to control the RecoupAerator operation. When J3 is in 0-10V position, JMP1 MUST be in EU position for the 0-10V input to work.

U. Not connected. Empty socket.

V. **0-10V DC input:** When J3 is in the 0-10V position, this post connects to the negative side of the 0-10V DC control.

W. **QC1**: Quick Connect 1. Used as an auxiliary output control option. QC1 will be electrically connected to QC2 when the relay (X) is closed. Max rating: 1A@24VAC.

X. **Low voltage pilot duty relay**. Normally open. Closes according to selection made at J7 (S). Default: closes when the ERV is turned on.

Y. **QC2**: Quick Connect 2. Used as an auxiliary output control option. QC2 will be electrically connected to QC1 when the relay (X) is closed. Max rating: 1A@24VAC.

Z. **JMP1**: Remote control input selection. Default wall controller in the North American remote wall control (NA position). J3 (P) must be in REM INPUT position. When J3 is in 0-10V position JMP1 MUST be in EU position for the 0-10V input to work.

AA. **On/Off** terminal. Wiring to mating terminal on NA wall controller.

BB. **FLT** terminal. Wiring to mating terminal on NA wall controller.

CC. **Vun** terminal. For wiring to mating terminal on NA wall controller.

DD. **NC** terminal. *Do not wire to this Empty terminal*.

EE. **Vr** terminal. For wiring to mating terminal on NA wall controller.

FF. **BLWR** terminal. For wiring to mating terminal on NA wall controller.

GG. **COM** terminal. For wiring to mating terminal on NA wall controller.

HH. **J4**: Blower control jumper. Default is '0' position for CFM control.

II. **J5:** DEFR OPTS: Defrost Jumper. Default position is '0' The heat wheel slows between 18ºF - 8ºF to prevent frost accumulation then stops when outside temperature is below 8ºF. The '1' position will simply turn OFF the machine below 8ºF. Position '1' is intended for use with a fresh air pre-heater.

JJ. **DP IN**: Delta Pressure Control input, negative (-). Not functional without Pressure Control Transmitter option. Recoupaerator has air flow offset capabilities, see airflow Offsets in this manual

KK. Not connected. Empty socket.

DP IN: Delta Pressure Control input, positive(+0) side. Not functional without Pressure Control Transmitter option. Recoupaerator has airflow offset capabilities.

Low Voltage Accessories:

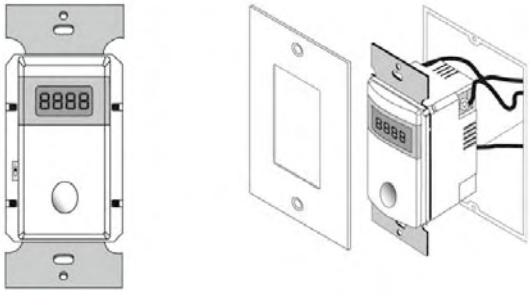

Bath Boost Timer 1.4 VA

CO2 Sensing Switch 3 VA

The RecoupAerator ERV is designed with the latest low voltage control technology using a 20 volt-ampere (VA) transformer (120Volts AC step-down to 24Volts AC)

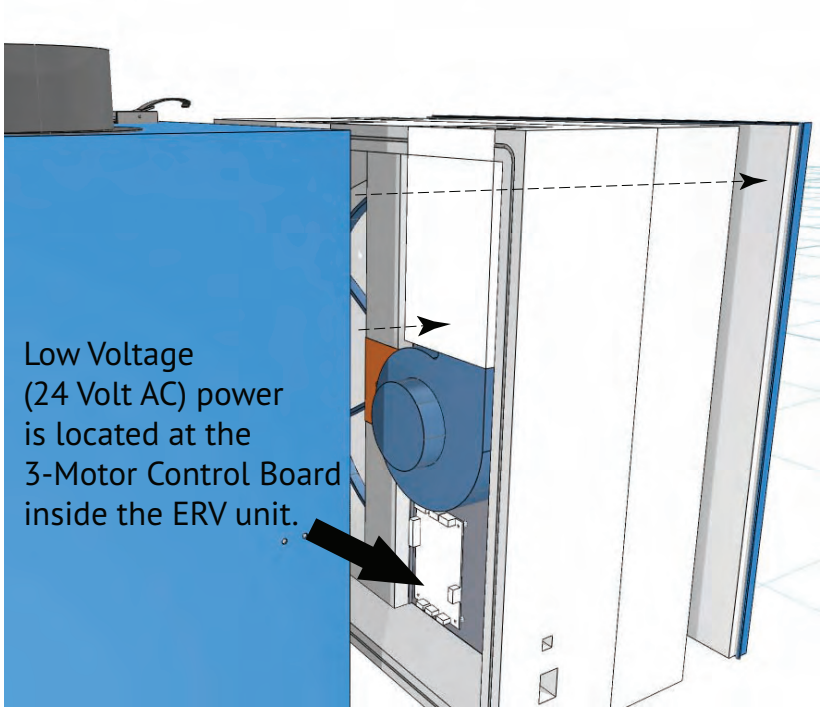

On the 3 motor Control, Use the screw terminals labeled 24 VAC **LINE** (1, 2, 3) **RETURN** (1, 2, 3). (F G H I J K on previous pages)

Limitations: *Note the RecoupAerator uses 4 VA under normal operating conditions, thus leaving 16 VA for optional accessories. When designing your control strategy, keep in mind the maximum 20 VA power limit.*

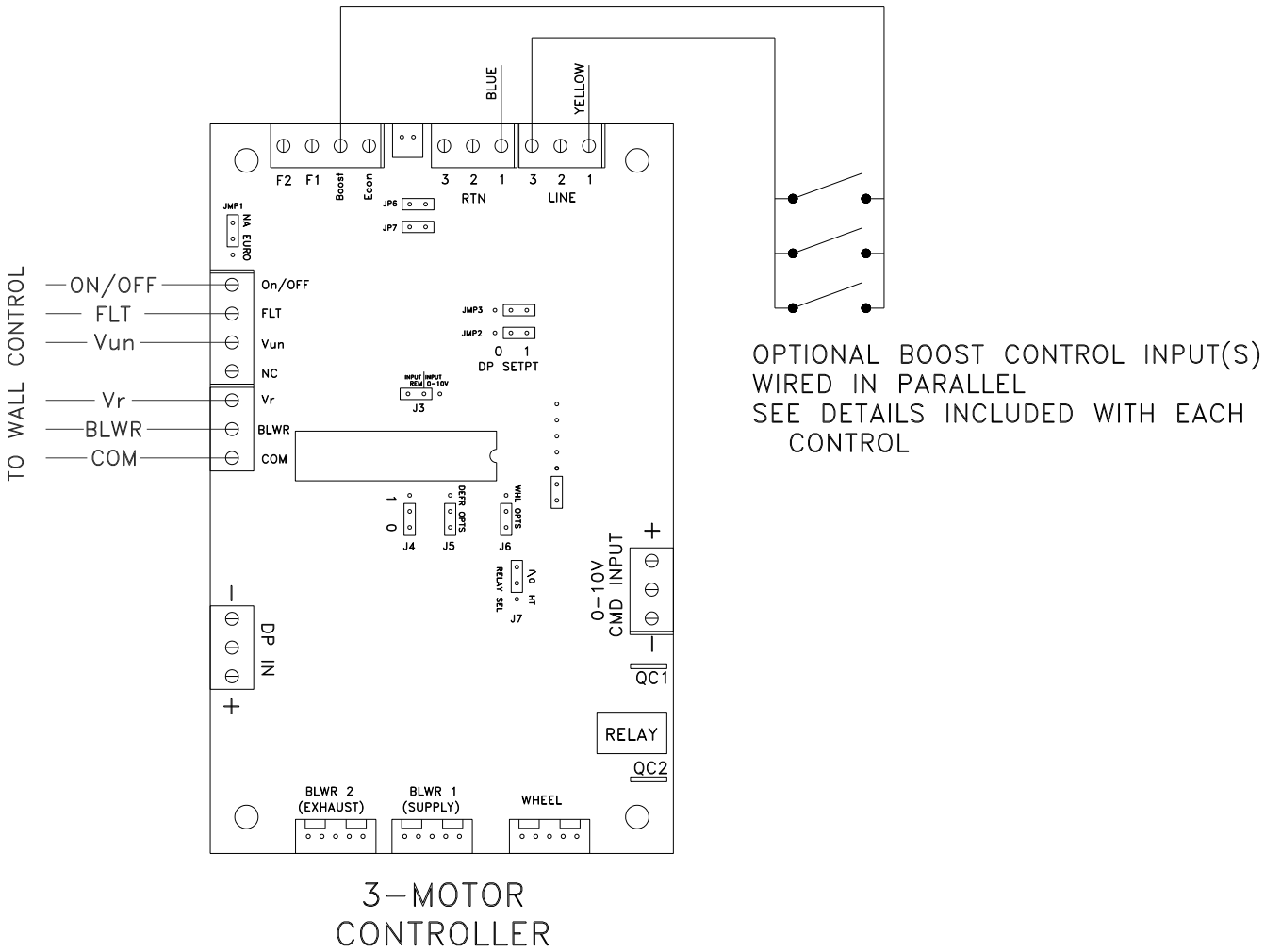

3–MOTOR
CONTROLLER

On the three-motor controller, there is one screw terminal specifically for **Boost** input. This feature allows for an override of the RecoupAerator's variable speed ability. Boost is useful for running at maximum airflow using a low-voltage signal input such as the optional Boost Timer. Typically, Boost inputs include bathroom timers, CO_2 monitors, and humidity monitors. Note that all Switch relays must be capable of switching LOW VOLTAGE (24vac). *High Voltage Contacts (110VAC) will often fail used with 24VAC because of the lack of required high voltage arcing to keep them clean and functional.*

EconoCool™

Each RecoupAerator is EconoCool™ equipped, so the outside air during summer months may be utilized to cool your home or business (e.g., during the night), thereby providing Energy Savings and Comfort. The built-in temperature sensor on the incoming air stream automatically stops energy recovery between 55° and 70° Fahrenheit. The EconoCool™ toggle switch must be ON for this function to work.

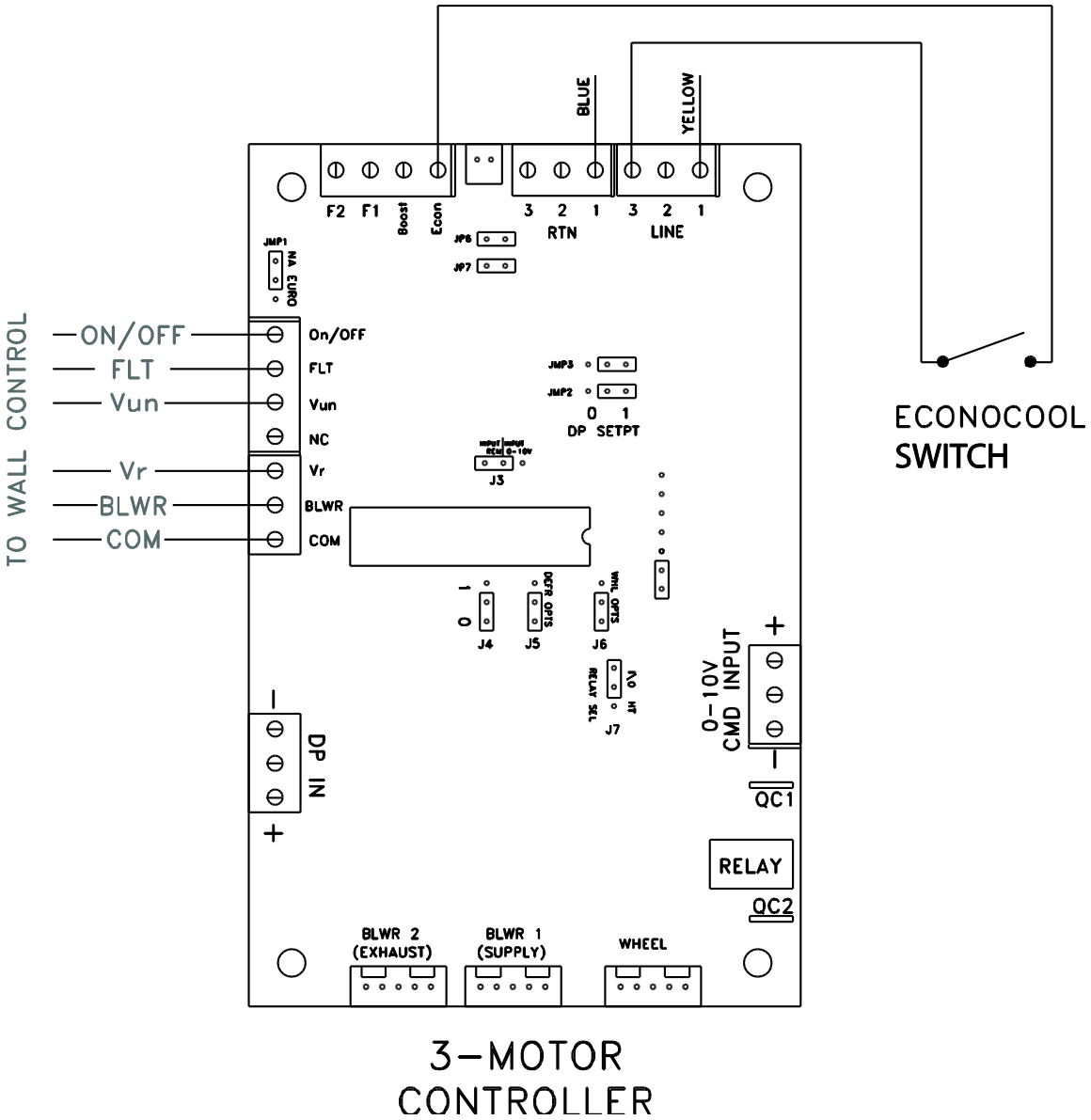

Wiring to a Furnace/ AC Air Handler

For this purpose, never use a device that cycles the main power to the UltimateAir. Cycling main power ON/OFF is detrimental to the system electronics and will void the warranty.

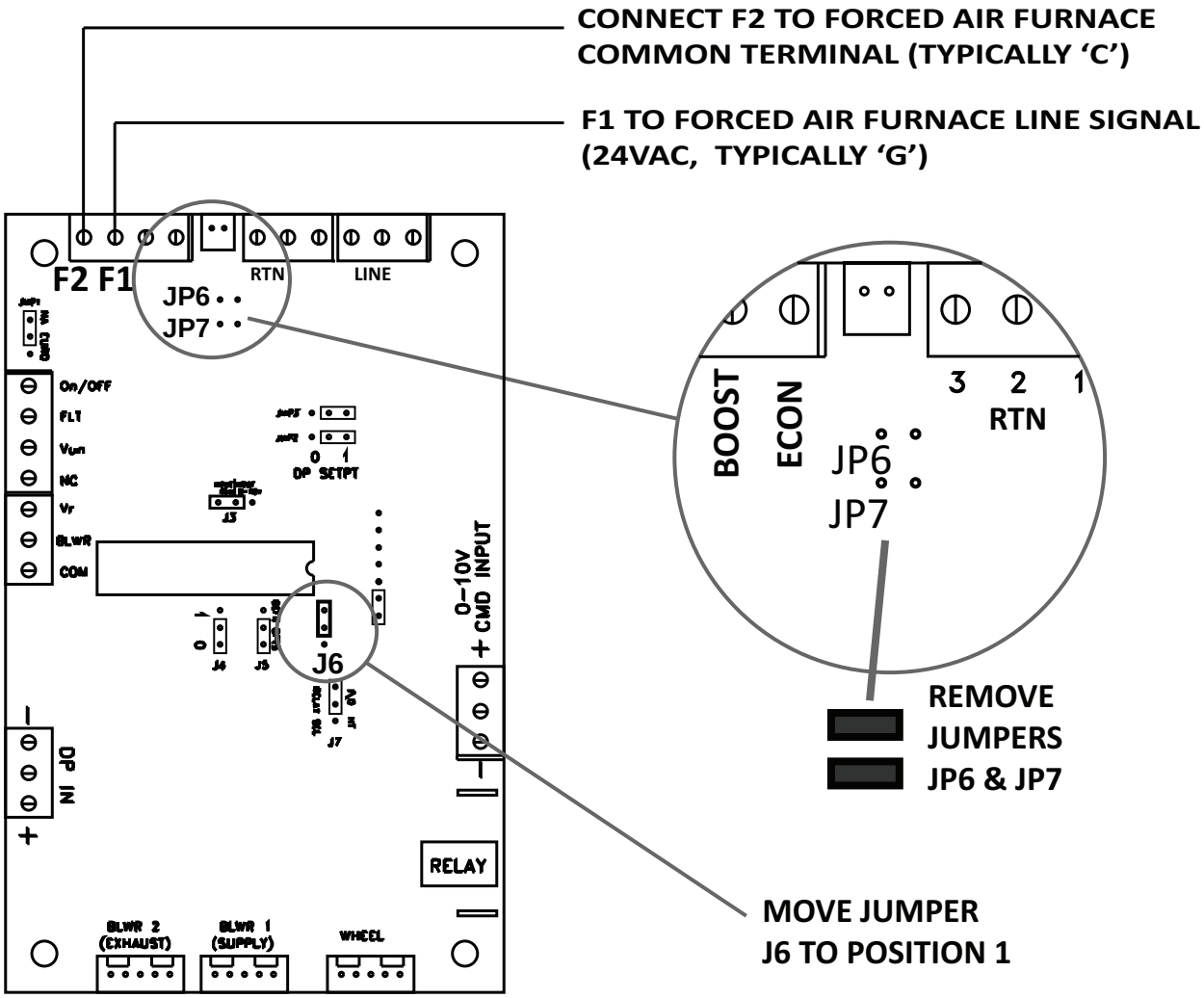

3 - MOTOR CONTROL
UltimateAir, Inc.

Wiring to a Furnace/ AC Air Handler Continued .....

When integrating the UltimateAir with existing forced air systems, it may need to operate in conjunction with the furnace/AC air handler.

1. On the Furnace, locate the 24 VAC (low voltage) which activates when the Furnace blower is ON. Furnace outputs are generally marked G for "Go/Run" and C for Common; refer to the particular furnace manual for details.
2. **REMOVE jumpers JP6 and JP7**, located just under the furnace F1 & F2 input terminals on the UltimateAir main board.
3. **Run two wires** (20/22GA) from the furnace to the input terminals on the UltimateAir main control marked **F1** (24 VAC Line) and **F2** (24 VAC common). The UltimateAir will now run only when the furnace air handler is ON.
4. **Move Jumper J6** from its default position ('0') to position '1'. This sets the airflow to full flow 80 CFM. If the airflow range is left at the default settings, the may not be able to overcome the static pressure of the furnace or AC air handler.

Note- When wired to run with the furnace blower, the ER80M will run only while the Furnace is active.

Wiring to Thermostat or Dry Contact Switches

This control scenario will utilize the UltimateAir internal 24Vac transformer power for ON/OFF function via any external contact switch.

On the UltimateAir 3Motor Main Board, **REMOVE jumper JP6**, located just under the Furnace connections F1 &F2. Run one Wire from the LINE Terminal to the Dry Contact Device you want to use. Run a second wire back from the Dry Contact Device to the UltimateAir ER80M **F1** Terminal.

Defrost Pre-Heater (factory installed option)

For Defrost Pre-Heat:

The Pre-Heater is a 350 watt high efficiency option for extended periods of outdoor air temperatures below 12ºF (-11ºC).

The pre-heater is more than a typical duct heater. The controller for modulating temperature will use only the minimum energy necessary to maintain the incoming air temperature just above 12ºF (the automatic frost-prevention-shut-off temperature of the ERV).

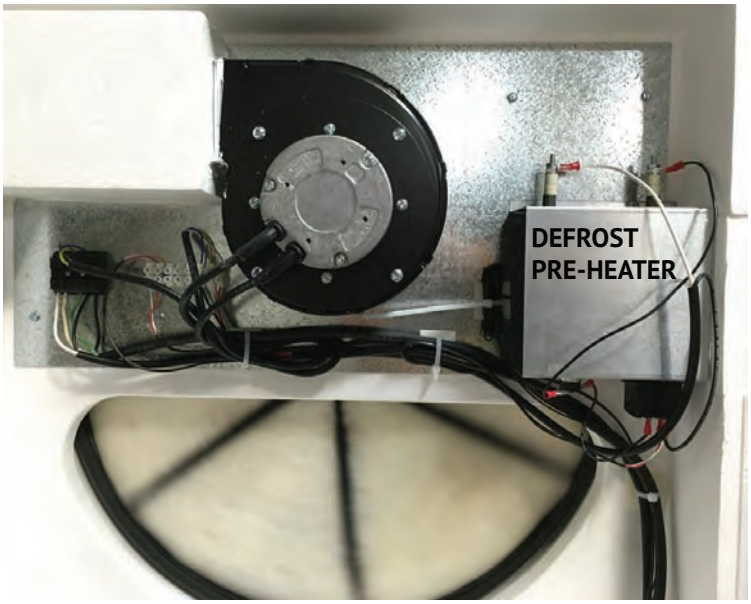

*Setup**Defrost Pre-Heat***

The heater, is mounted inside the machine at Duct 1 the “Fresh Air In” connected to the outdoors.

With the optional pre- heat installed, the three-motor main control board is required to be set-up with J7 in the TEMP position. *Please See Diagram Below*

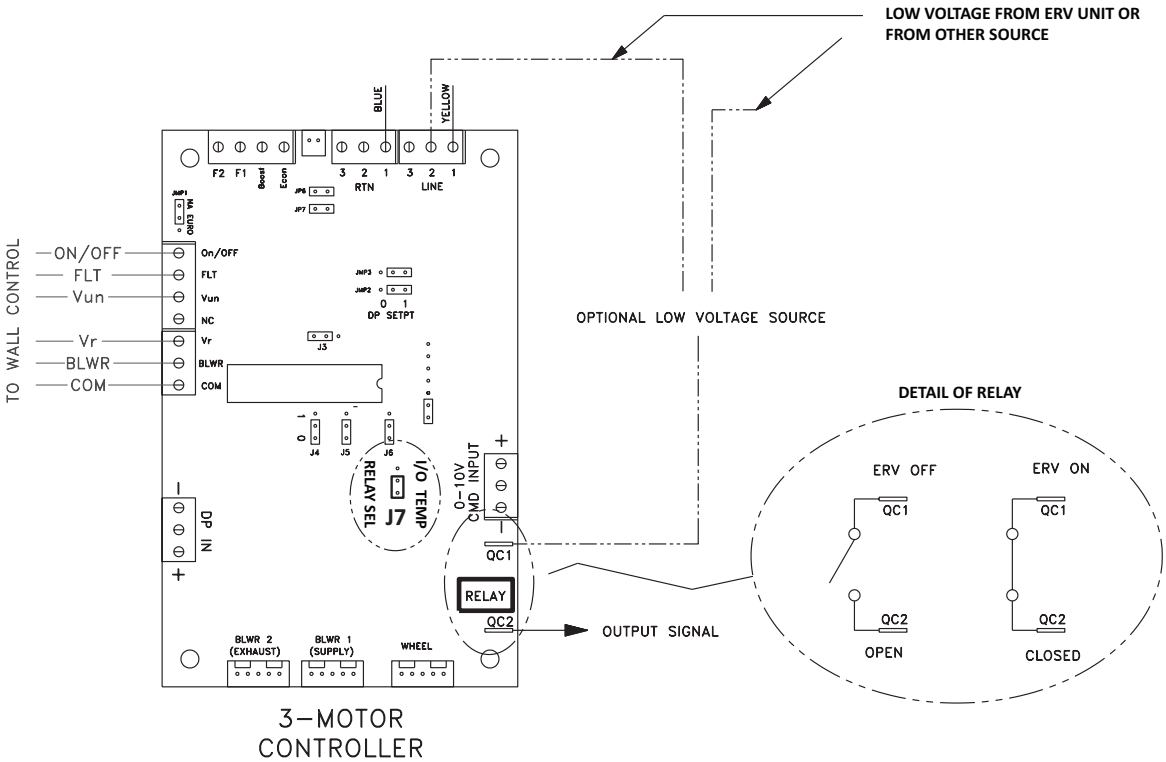

Defrost Pre-Heater Performance

Outside Temp F	ER80M Preheat Energy				
	20	40	70	100	CFM
10.0	0.0	0.0	0.0	0.0	
5.0	31.7	63.3	110.8	158.3	
0.0	63.3	126.6	221.6	316.5	
-5.0	95.0	189.9	332.3		
-10.0	126.6	253.2			
-15.0	158.3	316.5			
-20.0	189.9		watts		
-25.0	221.6				
-30.0	253.2				
-35.0	284.9				
-40.0	316.5				
-45.3	349.8				
Approximate energy to maintain 10 F incoming air for defrost at stated air flow					

Service & Maintenance

Tech Videos @ https://www.youtube.com/user/RecoupAerator/videos

CAUTION

Before performing any service to RecoupAerator, disconnect power to the unit. You must disconnect power by either unplugging the unit or by switching the applicable breaker in your breaker box to OFF. Otherwise, the main power to the unit will remain hot and could cause serious bodily injury.

Maintenance Check List

√ Check pre-filters and energy transfer/filtration material every six months or when the *Check Filter* light comes on. Which ever comes first.

√ Clean or replace the filtration material at least once per year.

√ Clean pre-filters every 3 to 4 months if continuously operated.

√ Check exterior weather caps regularly.

√ Lightly vacuum or dust the cabinet interior annually.

Reset the light thru the small hole in the faceplate just below the light. A small object such as a paper clip or the included Allen Wrench inserted in the hole of the faceplate and held for 2 seconds will turn OFF the light.

The Check Filter light comes on every 90 days of continuous operation. Because of differences in indoor and outdoor environments, the filters may or may not need cleaning every 90 days. The light is only a reminder to check the filtration material.

Energy Transfer/Filtration Material (Filter Pies)

To order replacement filtration materials, visit us online at:
www.ultimateair.com or call 740.594.2277

UltimateAir's patented energy transfer wheel contains six removable filter pie wedges, which can be replaced when the fibers become to loose or overly frayed. These pies are also known as the 'energy transfer/filtration material'. They are a MERV 12 rated filter as well as transfer heat and moisture from one air stream to the other with up to 99% energy recovery effectiveness.

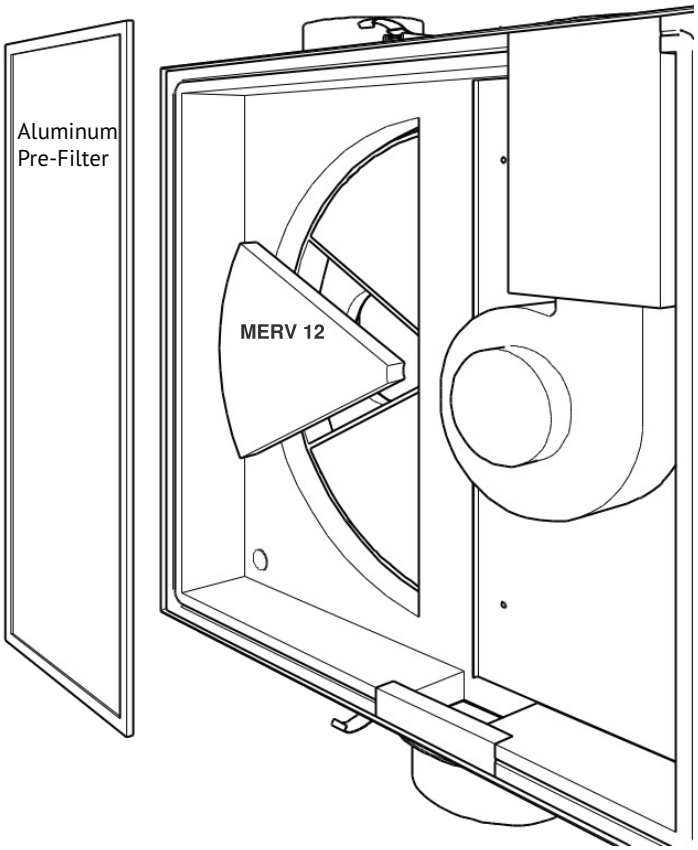

1. **Disconnect Power**
2. **Open the Service cover** by releasing the two Clasp Latches
3. **Remove the aluminum pre-filter** Clean the aluminum pre-filter at least once every six months. Clean more frequently if necessary.
4. **Inspect Filters** If the energy transfer/filtration material is dark gray or darker, it should be hand washed or replaced. Pull out the filter material "pie wedges", manually rotating the wheel to access the remaining wedges.
5. **Rotate the wheel by hand**, making sure the pieces are completely below the level of the spokes so the filters do not drag as the wheel rotates.
6. **Replace the aluminum pre-filter** and service cover

Service ER80M
Hanging Horizontal

Note: Seal around duct collars will need removed

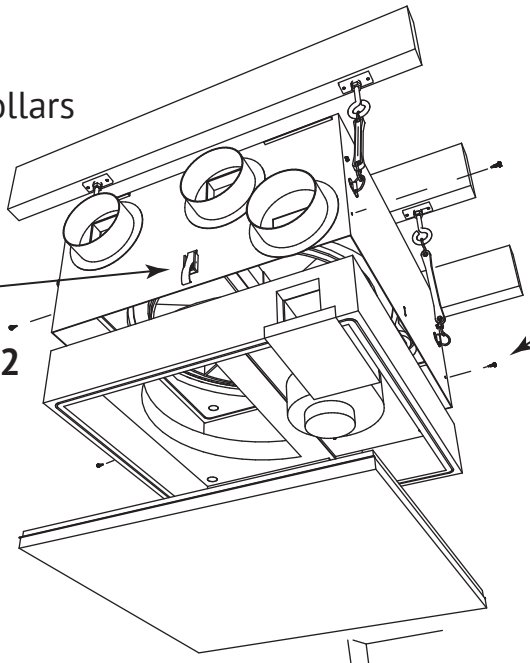

step 1

Filters & Exhaust Blower 2
Open Latches & remove bottom cover.

step 3

Belt Service
Remove four lower screws allowing lower blower assembly to be carefully removed.

step 2

Disconnect Wiring at terminals and Ties

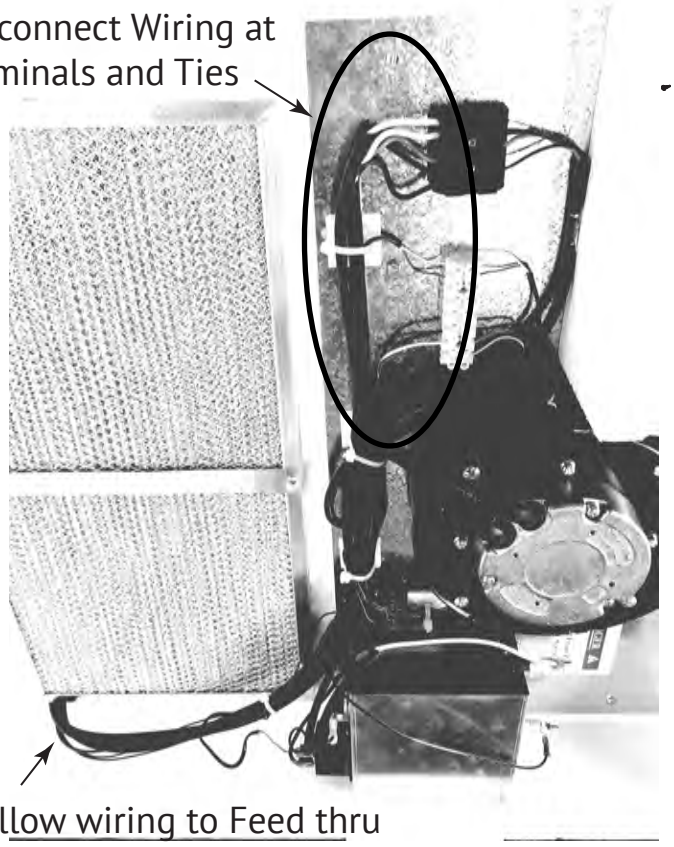

Allow wiring to Feed thru as lower blower assembly is removed.

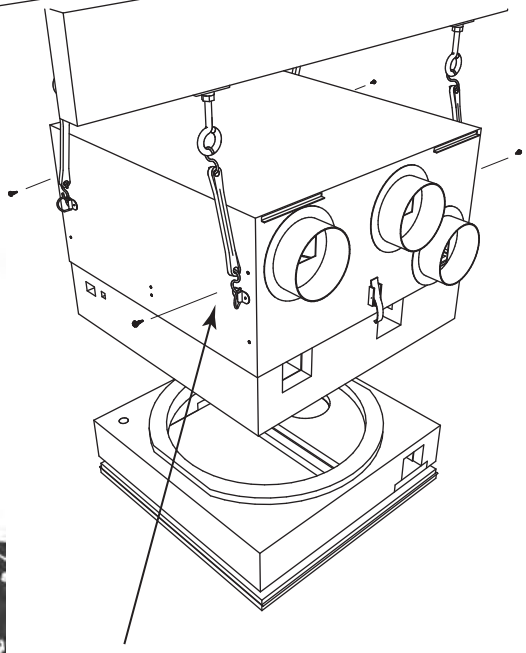

step 4

Fresh Air Blower 1,
Low Voltage Control & Aux Wiring
Remove upper screws from both sides allowing upper blower assembly with wheel to be lowered

Belt Service

1. **Disconnect Power**
2. **Open the Service Cover** by releasing the two Clasp Latches
3. **Disconnect the Wiring** Inside at the Quick Disconnect Terminal
4. **Pull the Insulating Foam** with Blower Mounted as one piece from the Case to gain access to the belt around the wheel and pulley.

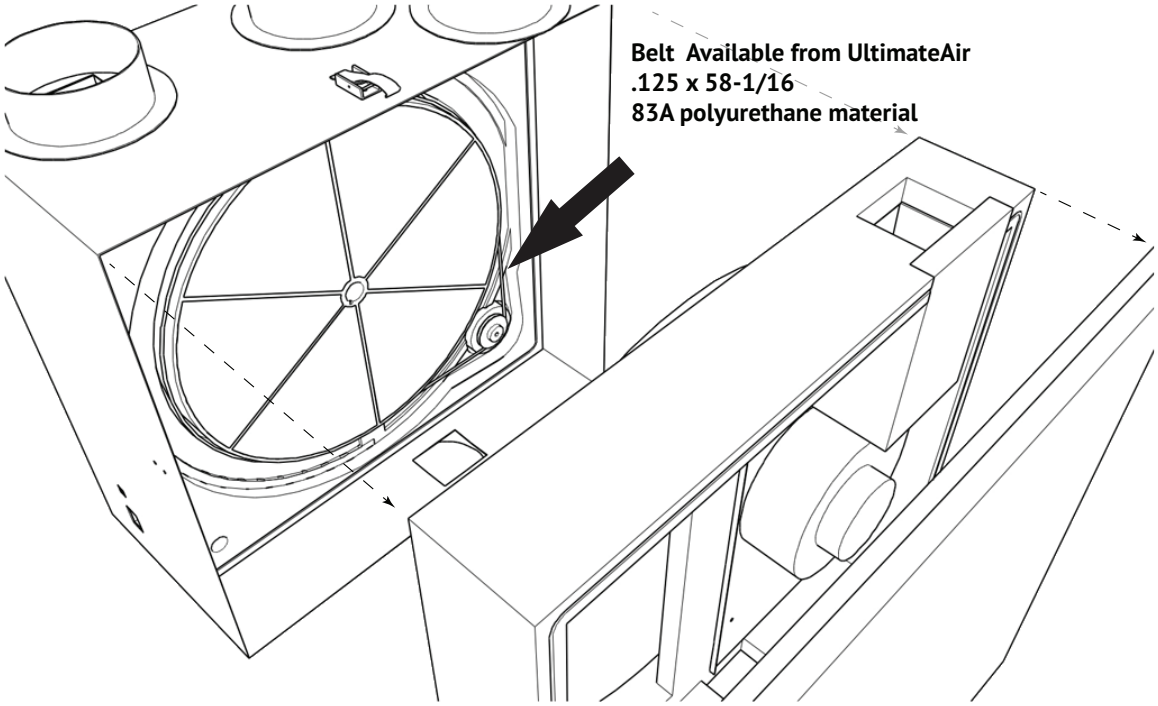

Exterior Weather Hoods

Check the exterior weather hoods periodically to ensure that the fresh air inlet and stale air exhaust hoods mounted on the outside of the building do not become clogged with debris such as leaves, grass, snow, or nests. Remove any debris by hand or wipe out the caps with a dry cloth.

Troubleshooting (Tech Support 740.594.2277)

Problem	Possible Cause	Recommended Solution
Green Light on Wall Dial Control does not come on	Power switch mounted on machine is Off.....	Check that Main 110VAC switch
	Accessories connected to the unit are not powered or wired correctly	Use a jump wire from LINE 24V on the Main Board to the boost BST terminal on the same board to see if machine responds by running at full flow. The problem may be in the Wall Dial if Boost works correctly.
	Blown fuse.....	Check and replace the main fuse. ¼ amp
	At least 100 VAC may not be reaching the machine	Verify all connections and replace any loose wiring
	Jumpers on three-motor controller may not be in the correct position	Make sure that NA/EURO jumper is in the correct position on main board
	Wires from the Main Control Board in the power switch cover to the wall Dial may be crossed, Notice order of wire labels	
Green Light on Wall Dial Flashing	The RecoupAerator shuts off automatically at below 10° F to protect from frost forming inside the machine	Wait for outside temperatures to rise above 10° F or Purchase an efficient UltimateAir pre-heater for operation below 10° F (-12C)
	flow speed set too low	-Temperature Probe Problem.

Problem	Possible Cause	Recommended Solution
Excess humidity	(during heating season) RecoupAerator not operating continuously (during heating season) Moisture-producing source (e.g., indoor pool, hot tub, or unvented crawl space)	Set speed higher at wall controller Operate RecoupAerator continuously Consider additional exhaust fans in moisture-producing areas (e.g., bathrooms and kitchens)
What's that sound?	Small noises in the system	Insulated Flexible duct connected to the machine for 3 feet will minimize noise transmission through hard duct
	Obstructions in pre-filters and ducts	Clear airways of any and all obstructions, including termination vents and pre-filters
	Heat recovery wheel rubbing on insulation	Make sure pies are flush with heat recovery wheel edge and not rubbing
Poor air flow	Leaves or similar may be obstructing vents Restrictions in ductwork Dirty energy filtration material Ductwork too long, to many bends/elbows Wall controller is not at the right setting	Remove obstructions from any and all airways Remove any duct obstructions, excessive bends, and improperly Contact your HVAC service professional to fix ducting Adjust wall controller setting
Cold air	Un-insulated duct in unconditioned air space	Insulate all duct work in unconditioned air spaces
	Heat recovery wheel not rotating or one of the two blowers is not running	Check for broken or slipping wheel drive belt

Warranty & Installation Record

Date of Purchase:			Model #:	ER80M
Date of Install:			Serial #:	
Contractor Info				
Company			Contact Person	
Address				
City, State Zip			Phone	
Notes				

General Warranty Information

Be sure to promptly return your warranty registration or online @
http://www.ultimateair.com/warranty-reg

Your RecoupAerator is guaranteed to be free from defects in materials or workmanship for Two (2) years from the date of purchase. See Warranty card included in original packaging for complete warranty information. If you have questions concerning your warranty email us: info@ultimateair.com